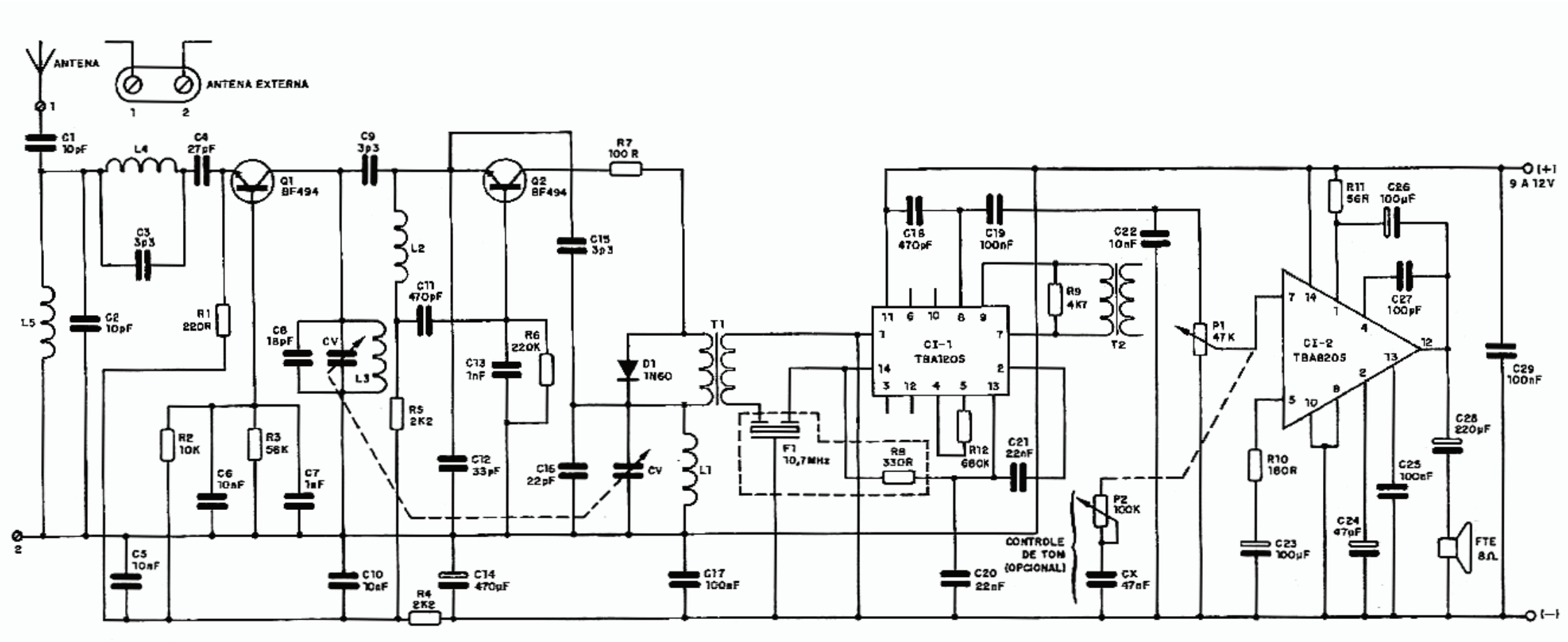
ANTENA
ANTENA EXTERNA
1
2
C1 10pF
L4
C4 27pF
Q1 BF494
C9 3p3
Q2 BF494
R7 100 R
C3 3p3
L2
C15 3p3
L5
C2 10pF
R1 220R
C8 18pF
CV
L3
C11 470pF
R6 220K
C13 1nF
D1 1N60
T1
R5 2K2
R2 10K
R3 56K
C6 10nF
C7 1nF
C12 33pF
C16 22pF
CV
L1
F1 10,7MHz
R8 330R
C5 10nF
C10 10nF
R4 2K2
C14 470pF
C17 100nF
C18 470pF
C19 100nF
CI-1 TBA120S
R9 4K7
T2
C22 10nF
P1 47K
R12 680K
C21 22nF
P2 100K
CONTROLE DE TOM (OPCIONAL)
CX 47nF
C20 22nF
R11 56R
C26 100µF
CI-2 TBA820S
C27 100pF
R10 180R
C23 100µF
C24 47µF
C25 100nF
C28 220µF
FTE 8Ω
C29 100nF
(+) 9 A 12V
(−)